Alu-Cab™

MAKE IT BETTER

FITMENT INSTRUCTIONS

C-D-MI24-E / C-D-MI24-E-SP

C2-D-MI 24 / C2-D-MI24-SP

DISCLAIMER

Preliminary information

All rights reserved. No part of this document may be reproduced, translated, stored in a retrieval system. Or transmitted, in any form or by any means, electronic, mechanical, photocopying, recording or otherwise, without prior written permission of the owner.

Review all instruction information carefully before installation.

Any damages, direct or indirect to the installer and/or property due to incorrect installation of any parts are the responsibility of the installer.

Due to the various application and fitment options available, the responsibility lies with the user to ensure all mounting points are secure and tight before every trip. If unsure, consult with your Distributor regarding the operations of our products.

Users are advised to be mindful of the load they are carrying and drive in accordance with road conditions.

Alu-Cab recommends that all sealing work is allowed to cure for 24 hours, after which you may drive the vehicle on normal paved roads. Before driving off-road with your Alu-Cab product or operating your roof conversion, an additional cure period of 48 hours is required.

Failure to follow these instructions will void your warranty. Please ensure that you follow the sealant manufacturers curing time as per their technical data sheet.

These times may differ slightly from the times we have recommended.

Service Enquiries email
queries@alu-cab.com

Installation Instructions

Alu-Cab™
MAKE IT BETTER

1 Canopy Fitment – Tools, Fasteners & Materials The tables below show the equipment, i.e. tools and fasteners required to start the canopy fitment of a C2-D-MI 24 CANOPY

1.1 **Tools & Items Required**

TOOL	
Ratchet	Flat Nose Pliers
Hand Drill	Phillips Screwdriver
10mm Socket	Panel Clip Removal Tool
13mm Socket	Flat Nose Pliers
13mm Ring Flat Spanner	T40 Torx Bit

1.2 **Fasteners Supplied (included with canopy)**

ITEM	QTY
M8x20mm Hex Bolt	12
M8 NYLOC NUT S/S	18
M8x16mm FLAT WASHER S/S - DIN 125	24
M8x80 HEX BOLT S/S	6
M8 SPRING WASHER S/S	6
M8 HEX NUT S/S	6
M8 NUT CAP	18

NB: Use anti-seize lubricant or paste when installing stainless hardware.

Please be sure to lay out all parts provided on a table or flat surface in order to check that all required parts are accounted for and prevent potential frustration at a later stage.

Installation Instructions

2

Canopy Mounting Brackets

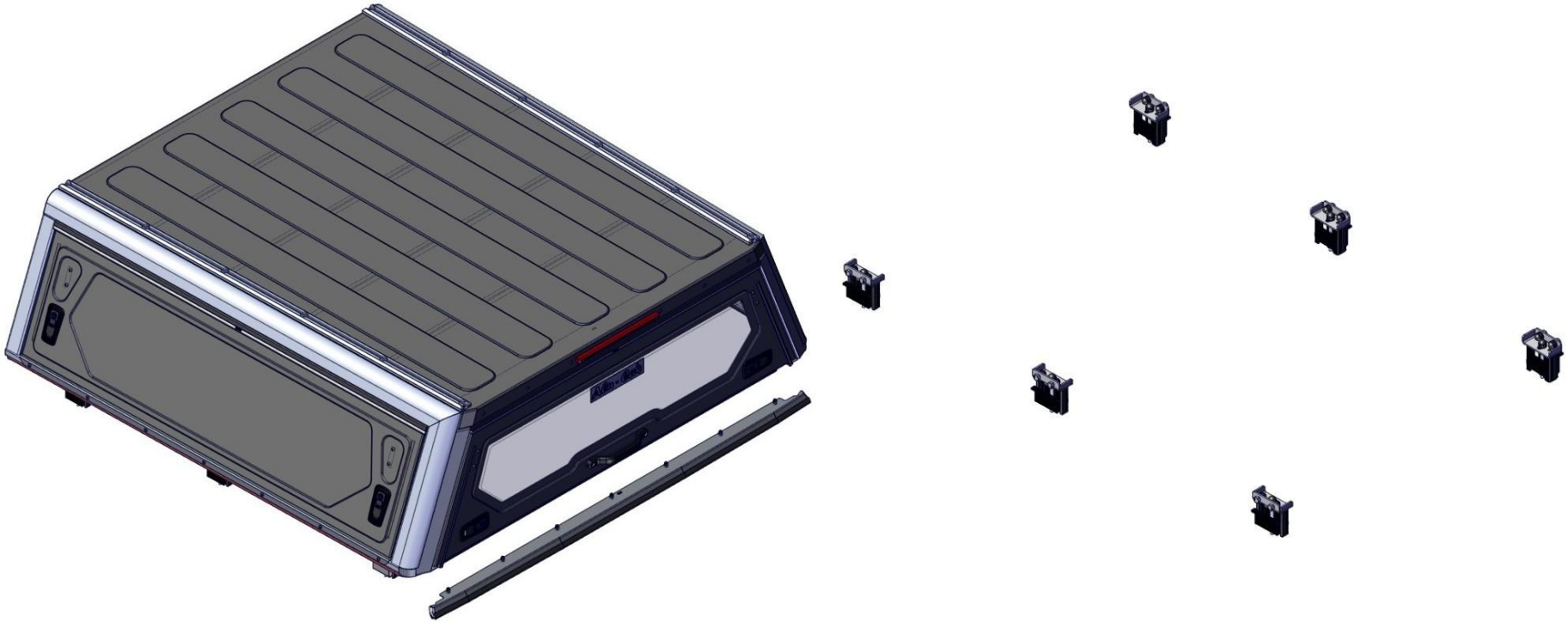

Installation Instructions

2

Canopy Mounting Brackets

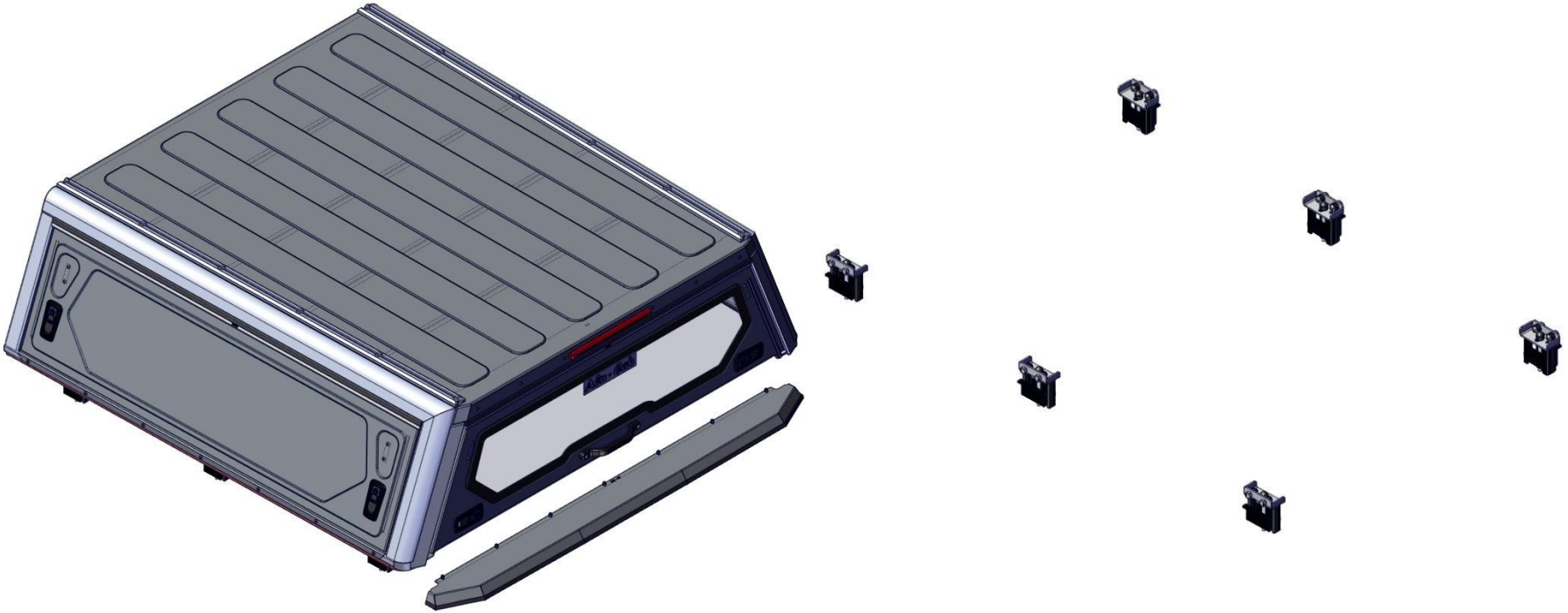

Installation Instructions

1

Canopy Fitment – Tools, Fasteners & Materials The tables below show the equipment, i.e. tools and fasteners required to start the canopy fitment for a C2-D-MI 24 CANOPY

1.3

Hardware Required

ITEM	QTY
TRITON 2024 UNBOXED CANOPY ASSEMBLY	1
C2 MS CLAMP MOUNT BRACKET 06 ASSEMBLY	6
TRITON 2024 TAIL SEAL (NO SPOILER)	1
TRITON 2024 TAIL SEAL (WITH SPOILER)	1

1.4

Consumables Required

ITEM
Turpentine
Shop Rags
Black sealant, silicone or Sikaflex
Window Cleaner

Please be sure to lay out all parts provided on a table or flat surface in order to check that all required parts are accounted for and prevent potential frustration at a later stage.

Installation Instructions

3

Canopy Mounting Brackets

Figures 1 and 2 below illustrate the canopy mounting bracket and parts list for the C2-D-MI 24 DC Double Cab.

Fig 1. Canopy Mounting Bracket

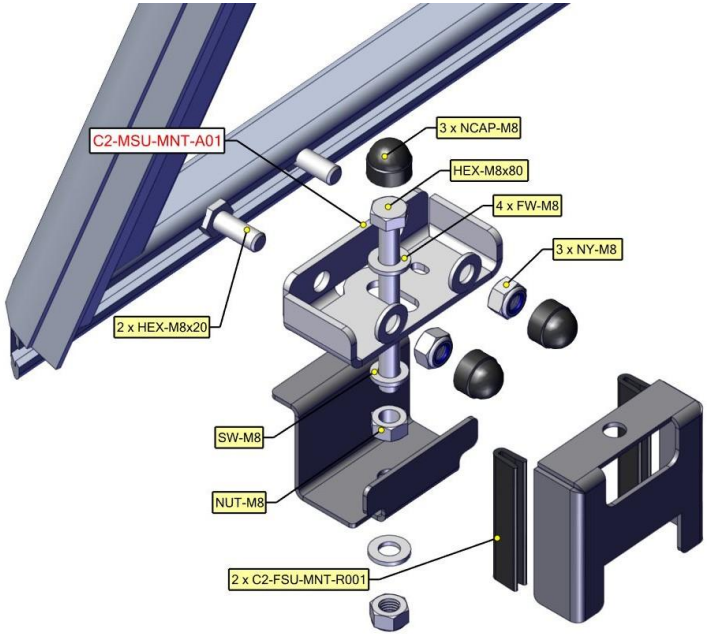

Fig 2

Installation Instructions

Canopy Fitment – Tools, Fasteners & Hardware

3.1

MOUNT BRACKET INSTALLATION

1. Mount top bracket and slide guide bracket assembly into nut slot.
2. When positioning the top bracket ensure the bracket lands between the plastic clips on the underside of the loadbin, as this is where the clamp bracket will rest.
3. The bracket at the front should be closer to the cab, approximately 200mm back from the front of the canopy.
4. The bracket in the middle should be mounted in the centre of the canopy.
5. The bracket at the back should be approximately 120mm from the rear internal edge of the canopy .

Space brackets so they fall between the clips on the loadbin

Installation Instructions

Canopy Fitment – Tools, Fasteners & Hardware

3.2

MOUNT BRACKET INSTALLATION (PART II)

1. With the top brackets in place; slide the Clamp Bracket on to the supplied M8x80 bolt.
2. Use the supplied nylock to finger tighten the clamp bracket, double check mounting brackets are equally spaced across load bin
3. Fully tighten bracket ensuring that it presses up against the inner lip of the load bin, securing the canopy and compressing the D rubber slightly

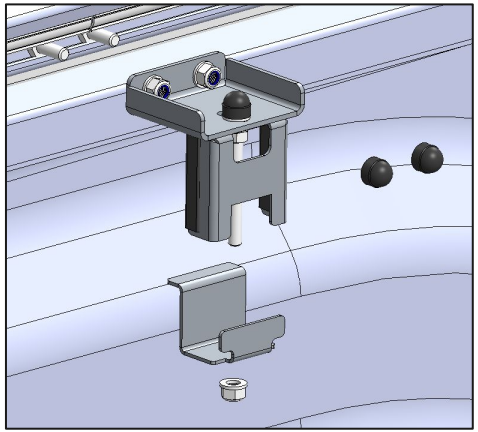

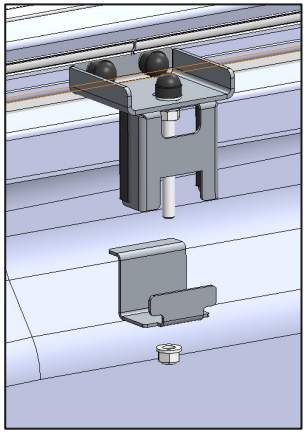

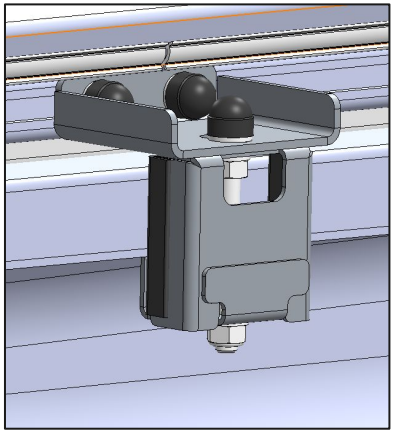

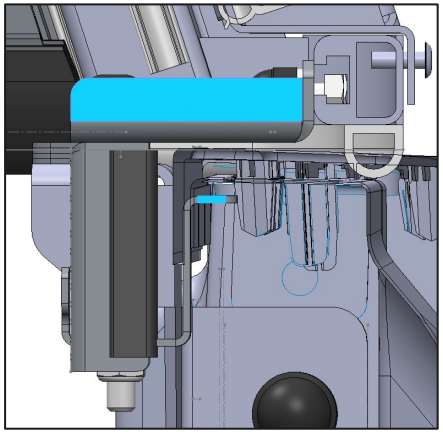

Installation Instructions

4

Canopy Mounting Brackets

Figure 3 below illustrate the Mounting Brackets position on the load bin respectively.

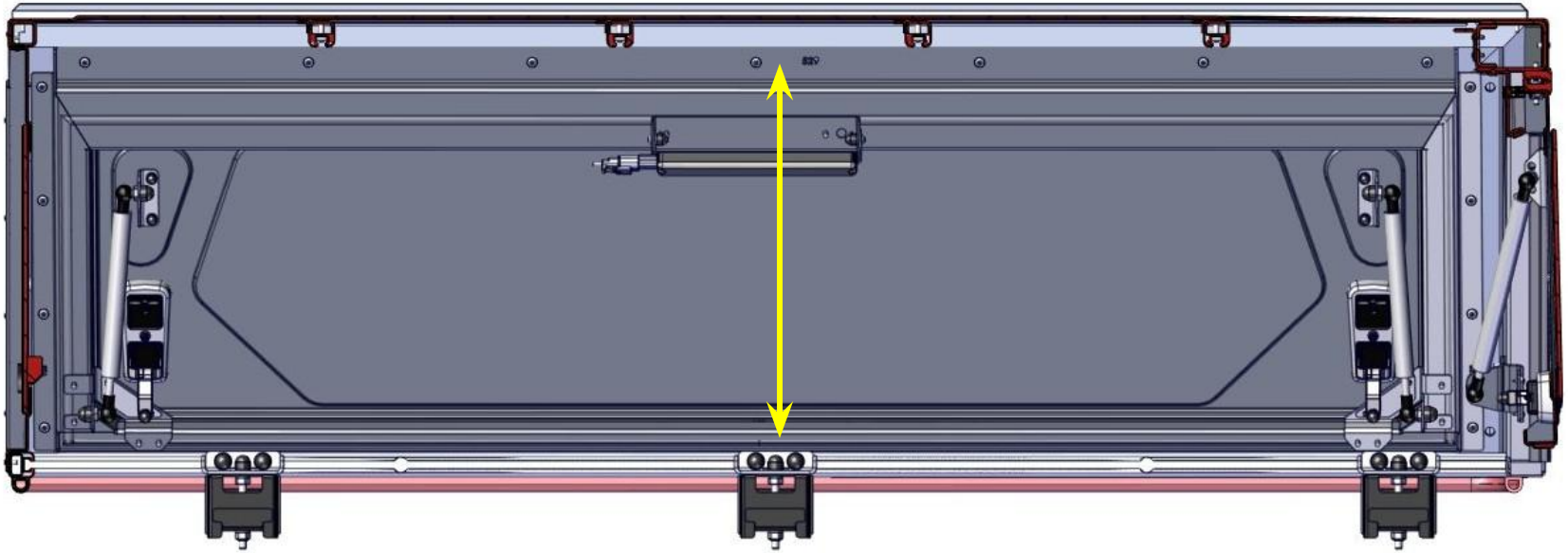

Middle Bracket is centralised with the Side Door

Fig 3

Installation Instructions

5

Canopy Mounting Brackets

Fit specified rubber to the tail seals as shown below before fitting tail seals to the canopy.

No Spoiler

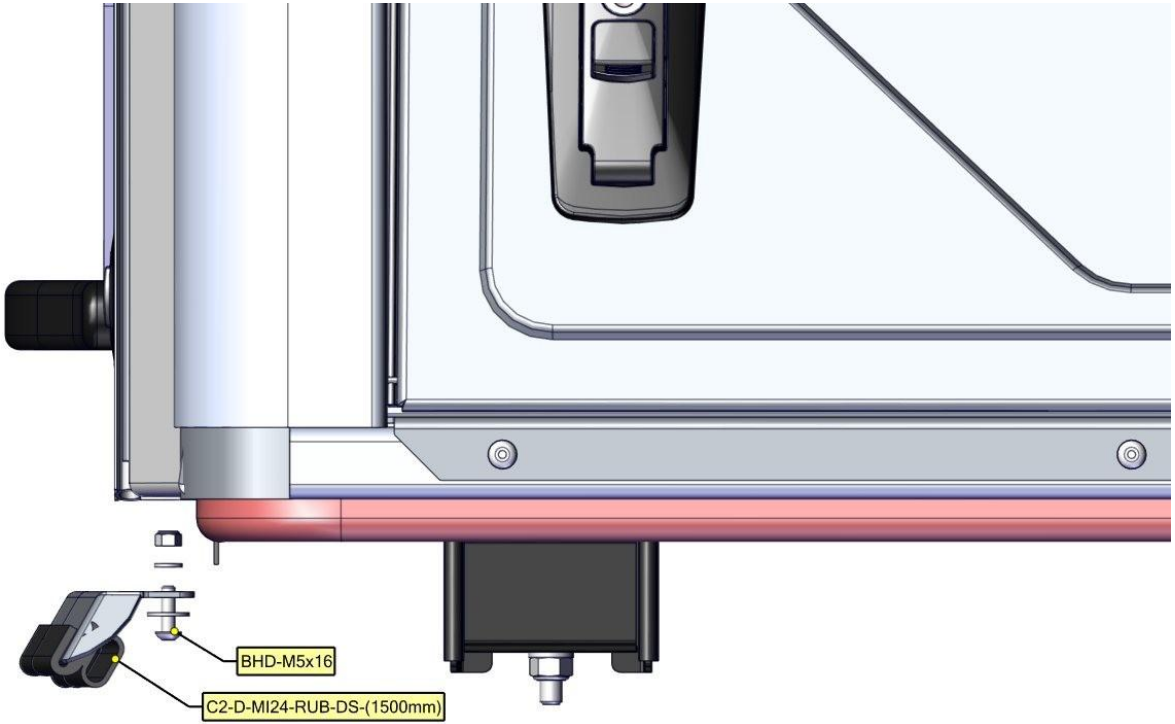

Installation Instructions

5

Canopy Mounting Brackets

Fit specified rubber to the tail seals as shown below before fitting tail seals to the canopy.

Spoiler

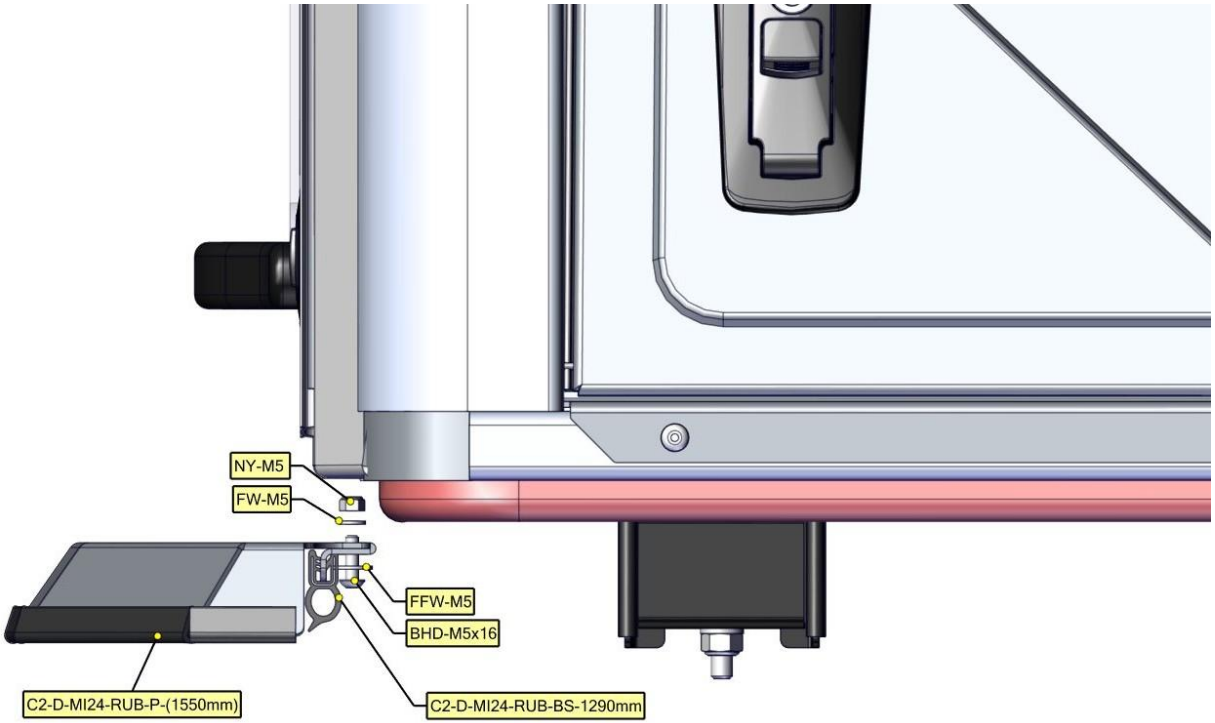

Installation Instructions

6

Canopy Mounting Brackets

Fit tail seals to the canopy using the specified fasteners shown below.

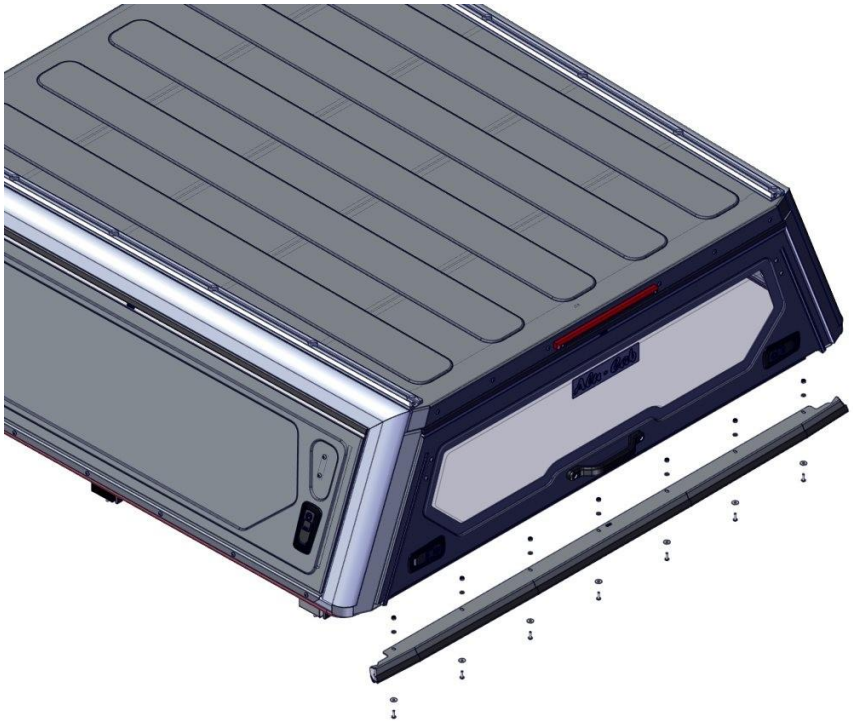

Installation Instructions

6

Canopy Mounting Brackets

Fit tail seals to the canopy using the specified fasteners shown below.

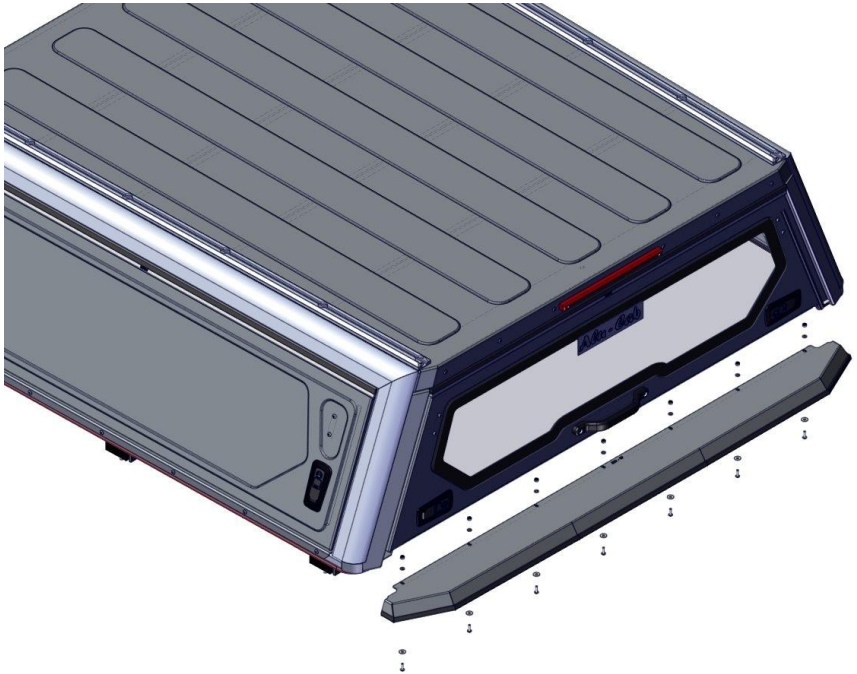

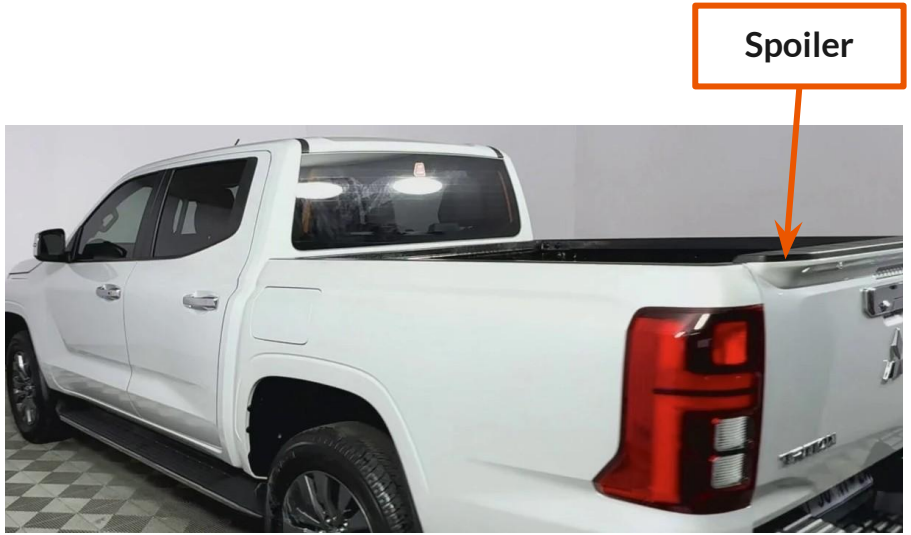

DISCLAIMER

All rights reserved. No part of this website may be reproduced, translated, stored in a retrieval system, or transmitted, in any form or by any means, electronic, mechanical, photocopying, recording or otherwise, without prior written permission of the owner.

Review all instructions information carefully before installation.

Any damages, direct or incidental to the installer and/or property due to incorrect installation of any parts are the responsibility of the installer. Due to the various applications and fitment options available, the responsibility lies with the user to ensure all mounting points are secure and tight before every trip.

If unsure, consult with your Distributor regarding the operations of our products.

Users are advised to be mindful of the load they are carrying and drive in accordance with road conditions.

WARNING

Always wear appropriate PPE (Personal protection equipment) when fitting our products. Although the mounting kit is designed to be DIY, if you have any doubts or concerns, contact an accredited fitment centre to carry out the work. Alu-Cab will not be liable for any injury to persons, and/or damage to products and/or vehicles.

While Alu-Cab Holdings takes reasonable measures to ensure that the contents of this Website are accurate and complete, Alu-Cab Holdings makes no representations or warranties, whether express or implied, as to the quality, timeliness, operation, integrity, availability or functionality of this Website or as to the accuracy, completeness or reliability of any information on this Website. Alu-Cab Holdings reserves the right to make changes, corrections and/or improvements to the information and to the products and programs described in such information, at any time without notice.

Alu-Cab Holdings will use reasonable endeavours to maintain the availability of the Website, except during scheduled maintenance periods, and reserves the right to discontinue providing the Website or the service or any part thereof with or without notice to you. Any person who accesses this Website or relies on this Website or on the information contained in this Website does so at his or her own risk.

Occasionally, at our discretion, we may include or offer third-party products or services on our website. These third-party sites have separate and independent privacy policies. We therefore have no responsibility or liability for the content and activities of these linked sites. Nonetheless, we seek to protect the integrity of our site and welcome any feedback about these sites.